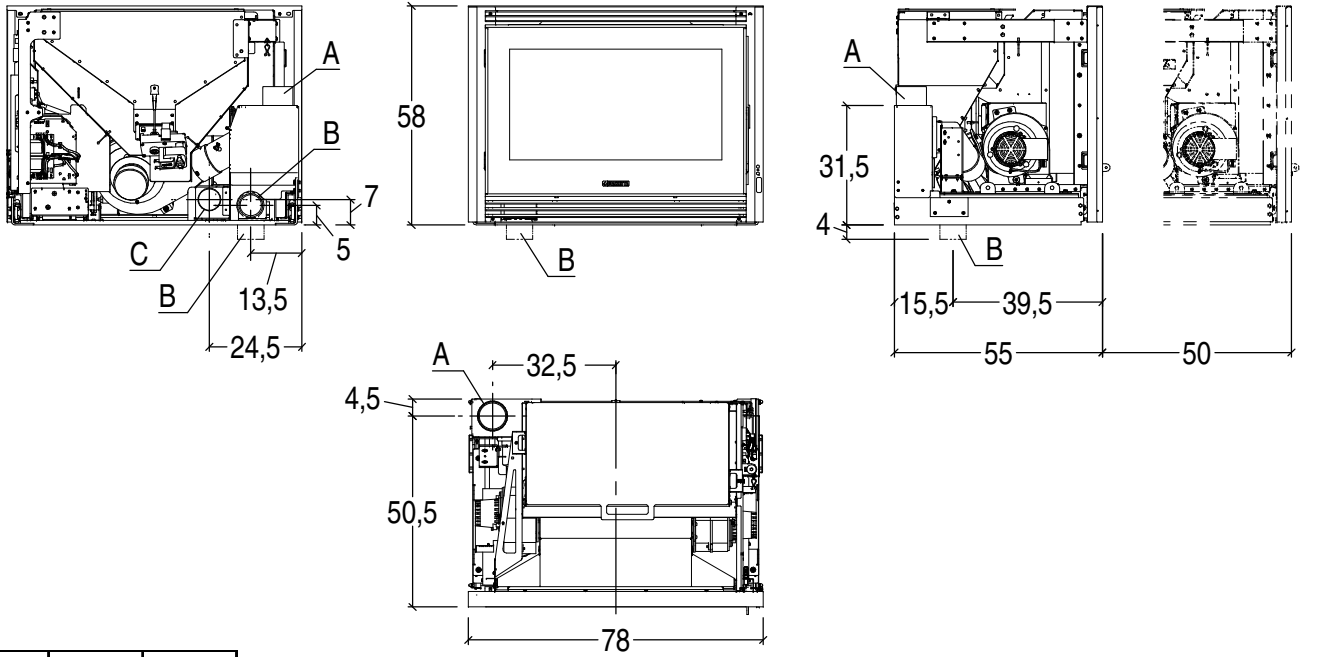

A	B	C
8 cm	7.5 cm	6 cm